Magnatech International, L.P.
17 East Meadow Avenue • Robesonia, PA 19551
(800) 523-8193 • (610) 693-8866 • (610) 693-8816 Fax
E-Mail: info@magnatech-int.com
Web Address: http://www.magnatech-int.com

TECHNICAL BULLETIN

SUBJECT: Machine Settings to Ensure Proper Operation of RB-2 Decks
BULLETIN #: 03-99
DATE: 07 June, 1999

The following four general principles must be attended to for satisfactory operation.

When the machine is experiencing excessive wire breaks, systematically check all factors in each of these four principles.

I. **Bobbin Winding Quality:** Must have equal length "ends" in each strand.

II. **Proper Carrier Operation:** All carriers must pay out only enough strand as braiding demands and always set at equal tension. (Outer carriers 10% more than inner carriers)

III. **Strand Paths:** Strand path from outer carriers to braid-point must be clear and unobstructed.

IV. **Power Former:** Must be properly adjusted and timed to just lift strand crossings over stationary disk.

I. BOBBIN WINDING QUALITY

A. Winding Performance Check

The only absolute check on end-length quality is to perform a catenary check. Customers with low wire break problems have established a procedure to check catenary every time new supply spools are mounted to bobbin winders. This is done to confirm that spools have been threaded correctly.

The recommended procedure is as follows:

- Wind the bobbin either full or to a test length of at least 150M (500 FT).
- Unwind all wire that was wound while the bobbin winder was running in the base speed mode and rapid traverse.
- Place ends coming from bobbin in a combination clamp so that the wires are laying in a band. Wind off 25.0 + meters (80 + feet) of wire.
- Place band of wire over a roller and attach a weight equal to 0.34 kg (0.75 lb) per end of wire (4.1 kg or 9 lbs for 12 wires etc.) as shown on sketch below.
- Starting at the bobbin end, use a spring as a comb and separate the band into individual wires. "Comb" the wire band.
- The "D" or catenary difference should be equal to 12.7 mm (0.50 inch) per end or less.

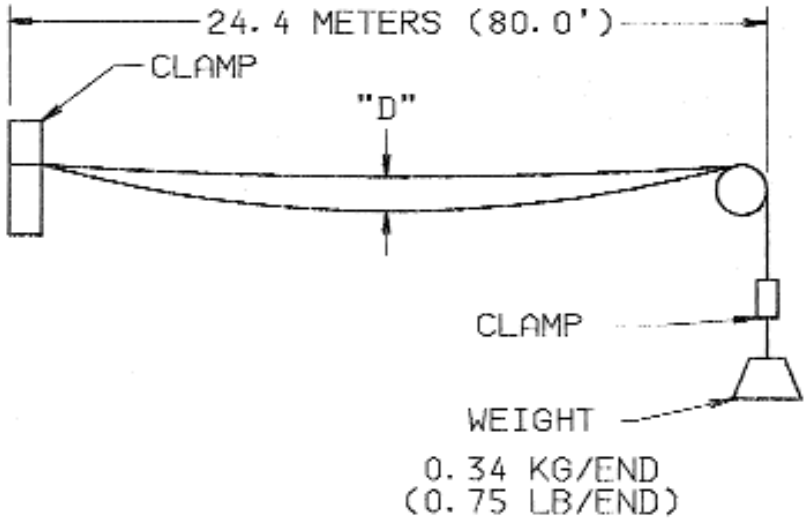

B. BW-7-M TENSION SETTINGS: Tension on every let-off spool should be equal. Check should be done regularly.

All tension settings and adjustments are made using the double thumb nut, pull rod, and spring arrangement attached to each dancer arm.

To set wire tensions, the following procedure is recommended:

- After threading of the let-off fixture, attach a clamp to the wire after roller "C". (See sketch below)
- Hook a tension spring scale to the clamp and pull in the direction of the normal wire path until the dancer lever contacts the inner stop.
- Observe the tension just prior to reaching the stop position and adjust the dancer lever tension spring for the desired tension.
- Repeat this procedure until all dancer lever tensions are equal.

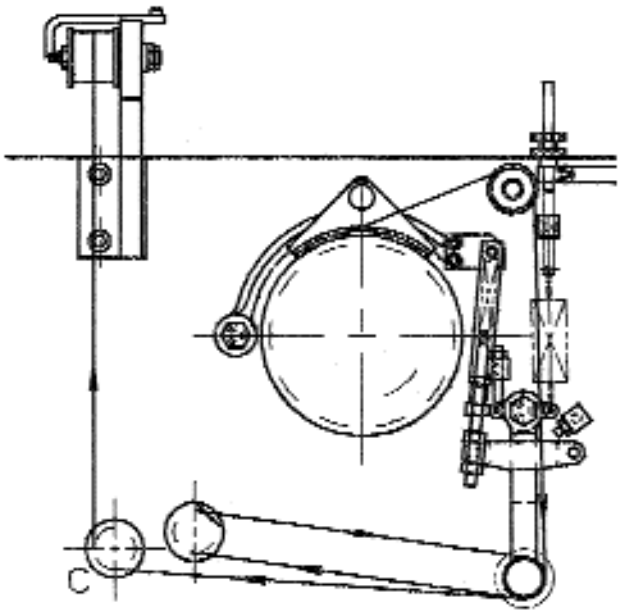

The suggested tension range is 0.90 kg (2.0 Lbs) to 1.6 kg (3.5 Lbs). Tensions at the lower end of the range are desirable. Tensions below 0.90 kg may cause supply reels to over-travel while excessive bobbin flange deflection is the result of tension settings above 1.6 kg.

C. Since strand is passing through the bobbin winder around Godets and to the beak as a band, (not as individual wires), it may give better quality if the strand is checked for absence of crossovers from the let-off horizontal roller all the way to the bobbin.

1. Crossovers will cause a spreading of the band on consecutive passes around the Godet wheels.

2. Confirm the flat lay and order of the band by tracing each individual wire from it's respective supply spool to the let-off horizontal roller. (see sketch below for make up of band)

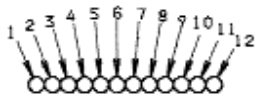

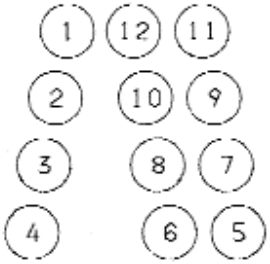

3. To hold the band, apply (2) 4 inch long pieces of masking tape, lengthwise, underneath the wire band; between the let-off horizontal roller and the 1st roller plate below. The taped band can now be pulled through the bobbin winder to the beak.

4. After securing the wire band to the bobbin, but before winding, confirm the flat lay of the band by running a 1 mm Allen wrench underneath the band between the beak and the bobbin. Observe the band for crossovers and correct the lay if necessary.

D. Confirm that the strand pulled off each bobbin for threading through the RB-2 carrier has all it's ends coming from the same lay.

For other Model Bobbin Winders, please refer to manufacturers operation procedures.

II. PROPER CARRIER OPERATION

A. Spring clutch must hold firmly 17 NM (150 in.-lbs.) torque.

1. A tool for checking carrier torque can be made from an old bobbin. A new end with the appropriate hex is welded to the bobbin on the side opposite drive keyways. Clearance is required for bobbin post and bobbin lock.

2. The carrier is mounted vertically and securely in a vise with the above tool slipped over the bobbin post, engaging the clutch hub. The torque wrench is applied to the hex of the modified bobbin. With the handle of the torque wrench held as square to the centerline of the bobbin post as possible; pull the end of the torque wrench uniformly until the desired torque is reached.

   Note: Do not over torque spring. Over 20 NM (175 in-.lbs.) will distort the spring.

3. If the spring will not hold the against the torque, de-glazing is the first step.

   a. Over time the clutch hub and the inside of the clutch spring develop a slippery burnished finish. This is not a wear polishing, but is instead a slow "plating-out" of the molybdenum-disulfide additive in the Aeroshell 17 clutch grease.

   b. De-glazing is not only to "rough-up" the burnished surfaces of the spring I.D. and clutch hub O.D., but also to remove Moly-plating.

      Note: Do not remove parent material.

   c. To de-glaze the following procedure is recommended:

      - Use fairly fine (100 or 120 grit) emery cloth until surface is a uniform matte finish. This ensures that the plating is not just scratched through, but is actually removed.
      - Consider spinning the clutch hub slowly in lathe, then holding emery cloth against the hub surface.

        Note: Do not remove parent material.
      - Do not round off or radius the corner of clutch hub.
      - De-glazing the I.D. of the clutch spring is best done by hand.
      - Remove all traces of grit.

d. While spring is removed, check spring and tang slot.

- Spring is made from 2.4 mm (3/32") square wire. When tang measures less than 1.6 mm (1/16") wide, discard spring.
- When tang slot is greater than 4.8 mm (3/16") wide, replace clutch housing.
- If lower (axial) spring tang was broken, then also de-glaze stationary hub at base of bobbin post. This ensures that spring torque is taken up on that surface and not just at tang.

4. If clutch still will not hold 17 NM (150 in.-lbs.) torque, after de-glazing, or if clutch "grip" is not crisp but mushy; replace spring.

   a. New spring type B6-87-7 should consistently pay out with a quick chatter, not with long releases.

   b. Older spring types B6-87-6 or -5, or -3 can be mixed in (even on the same deck) with the new type spring.

5. Maximum wear on clutch hubs is 0.25 mm (0.010 inch) on the diameter. Wear will be concentrated on the first 3 mm (1/8 inch) of lower edge, but will retain full diameter just under flange on top of hub. Measure just under flange to determine full diameter, then check lower edge against this dimension.

B. Check carrier release points. 3.2 mm (1/8 inch) release, 4.8 mm (3/16 inch) hold.

1. Small amounts can be adjusted at square headed screw on compensator arm.

   Note: If this screw is too far in, the return-spring tang on plastic spring housing could hit compensator arm pivot. Re-set these screws to 12 mm (15/32 inch) for "A" dimension at every clutch re-build. (See Sketch)

2. Adjustment of the clutch spring may require a rotational repositioning of the bobbin post. If so, remember to torque the mounting screw to 156-162 NM (115-120 ft.-lbs.).

C. Only after the carrier release points have been set, check carrier tensions.

1. Always check carrier tensions by pulling strand directly toward braid point.
2. Check only on bobbins at horizontal location (at side of deck). At other locations, bobbin weight affects the tension reading.
3. Outer wire carrier tensions should be approximately 10% higher than inner carrier tensions. If hose shows any "twist" coming off braider, change difference between inner and outer carrier tensions until "twist" disappears.

SETTING DIMENSIONS
A = 12 mm (15/32 inch)
B = 13 mm (1/2 inch)
C = 9.5 mm (3/8 inch)

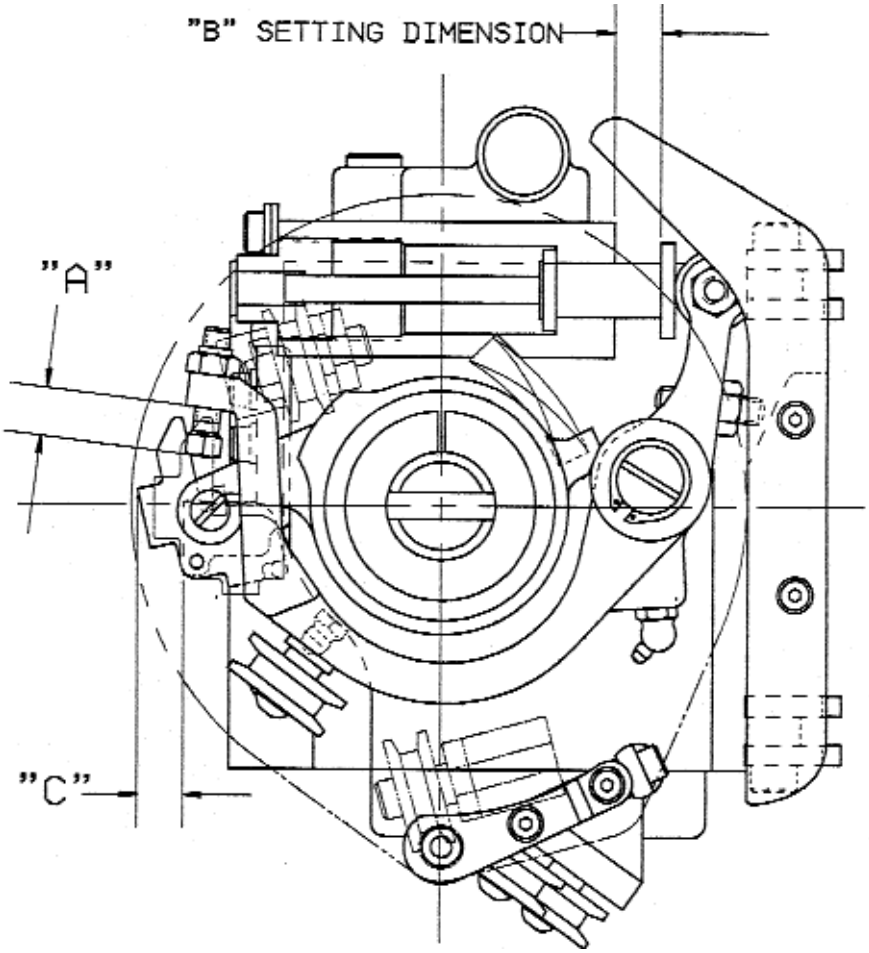

III. STRAND PATHS MUST BE CLEAR AND UN-OBSTRUCTED

A. It is important to note that all recommended settings that follow are nominal for normal products. Unusual products may require different dimensions on the settings to accomplish the same clear paths.

B. Strand guide setting.

1. Distance between guides should be 2.3 mm (0.090 inch).

   a. Most critical to maintain this dimension at opening. Can be wider at positions radially inward from the guide opening.

   b. If too wide inward, twist the guide by levering center part of span away from turntable casting while tightening screw.

2. Right hand guide B6-733-3 should be set flush with squared off end of outer track.

3. Left hand guide B6-734-3 should be set above chamfered end of outer track, to keep the strand from hanging up on this edge of track.

4. Both guides can be set flush to (or if this is too wide, then equally away from) the ends of the inner tracks.

5. Guide locations can be easily disturbed if operators use the guides as "handles" to manually turn the decks. Discourage this practice!

C. Strand guard and strand deflector settings.

1. These settings are inter-related. The desired results are as follows:

   a. Strand never touches segment casting.

   b. Strand never hangs up on DX blocks surrounding fingers.

   c. Strand is running straight from strand rest to power former disc.

      - Possibly with a slight bend over strand guards

      - NEVER with a subsequent "Z-bend" caused by touching strand deflectors on carriers.

2. Strand deflectors should be set 1.5 mm (0.060 inch) above flat machined surface on back of carrier casing.

   Note: On 36-carrier machines, it is also critical that strand deflectors are set such that trailing end deflects strand around the carriers' trailing drive plate edge. This may require:

   a. Moving strand deflector as fully as hole clearance allows toward trailing edge.

   b. Loosening and relocating trailing drive plate set inward to maximum allowed by hole clearance.

3. Outside diameters of strand guards are set relative to outer machined circumference of segments.

   Note: The true O.D. of guards is at center and both tips.

   a. 16-carrier - guards are set 3.2 mm +/- 0.4 mm (1/8 inch +/- 1/64) BELOW segment circumference.

   b. 20 & 24-carrier - guards are set flush +/- 0.4 mm (+/- 1/64 inch) to segment circumference.

   c. 36-carrier - guards are set 8 mm +/- 0.4 mm (5/16 inch +/- 1/64) BELOW segment circumference. (can be as much as 9.5 mm (3/8") below for difficult products)

4. If finger timing is not correct, the strand path can be obstructed.

   a. Verify timing with gauge and turntable lock method whenever segments are disturbed.

   b. A quick check (when inner carriers are removed) is to rotate deck until one finger is just emerging from DX block, then every alternate finger should also be just emerging. Move deck slightly until next finger is just emerging, other half of alternate fingers should be just emerging. Any fingers timed early or late should be obvious.

5. Strand path can be upset if any actuator arms are out of time.
   a. Move deck until all arms are at the middle of their travel. Any arms timed early or late should be obvious.
   b. A mis-timing in the internal gear train, driving the eccentrics, (off by one tooth) will cause a significant displacement of the arm.
   c. If one arm is off only a small amount, the key between pinion gear shaft and eccentric may have compressed or sheared. This is possible if eccentric clamping screw is not tight enough. Check key, replace if necessary and confirm the torque on clamping screw.
6. Strand rests must be perpendicular to inner track.
   a. Crashes involving the inner carriers can knock the rest assemblies askew.
   b. To reset, remove entire strand rest assembly from turntable. Loosen (2) soc. hd. cap screws holding vertical parts to the base. Re-align side pieces square to mounting rail and re-torque screws to 203-216 NM (150-160 In.-Lbs.) Then re-mount assembly to turntable.

IV. POWER FORMER MUST BE PROPERLY ADJUSTED

A. Power Former Settings

Variables of strand tension, strand friction, and the angle at which strands approach the braid point prevent the accurate calculation of a Power Former setting for a given hose specification. This must be done by trial and observation. It is IMPORTANT to remember that every change in hose specification will change angle-to-braid point, therefore will also change lift and timing of optimum Power Former performance. For this reason, we strongly recommend that the optimum Power Former setting, once determined; should be documented along with other critical product parameters such as carrier tension.

B. Procedure for establishing a Power Former setting

The procedures and guidelines outlined below are based on experience and permit one to establish settings with a minimum of effort.

1. Inch the machine to the so called "neutral" position, in which all actuator arms are in the same orientation. At this point arms on adjacent outer carriers are in identical positions even though they are traveling in opposite directions.

2. The reciprocating disc (See Sketch) must now be set to a baseline position, which is different for each size braider.

   a. 16-carrier machine - reciprocating disc going away from braid point, part way back.

   b. 20-carrier machine - reciprocating disc coming part way forward.

   c. 24-carrier machine - reciprocating disc all the way back away from braid point.

   d. 36-carrier machine - reciprocating disc all the way forward toward braid point.

   If adjustment is required, loosen the (3) hex head screws in the eccentric, and reposition the drive flange as required. (See Sketch)

   Note that by removal of the screws, the eccentric can be adjusted to any angular position. Whenever loosening or tightening these screws, apply an opposing torque support to the drive flange to prevent fastener torques from being applied to the gearbox drive train. (Apply the opposing torque by

inserting a drift pin or screw driver in one of the holes in the outside diameter of the flange. One 16 mm dia. x 150 mm long (0.625 inch diameter x 6 inch long) and one 7 mm dia. x 150 mm long (1/4 inch diameter x 6 inch long) pin should be provided by the customer for this purpose.)

3. Upon setting the reciprocating disc at its baseline, torque the (3) hex screws to 36.7 - 39.4 NM (325 - 350 In.-Lbs.). Use only part #136-323 hex screws of grade 8 specification for this purpose.

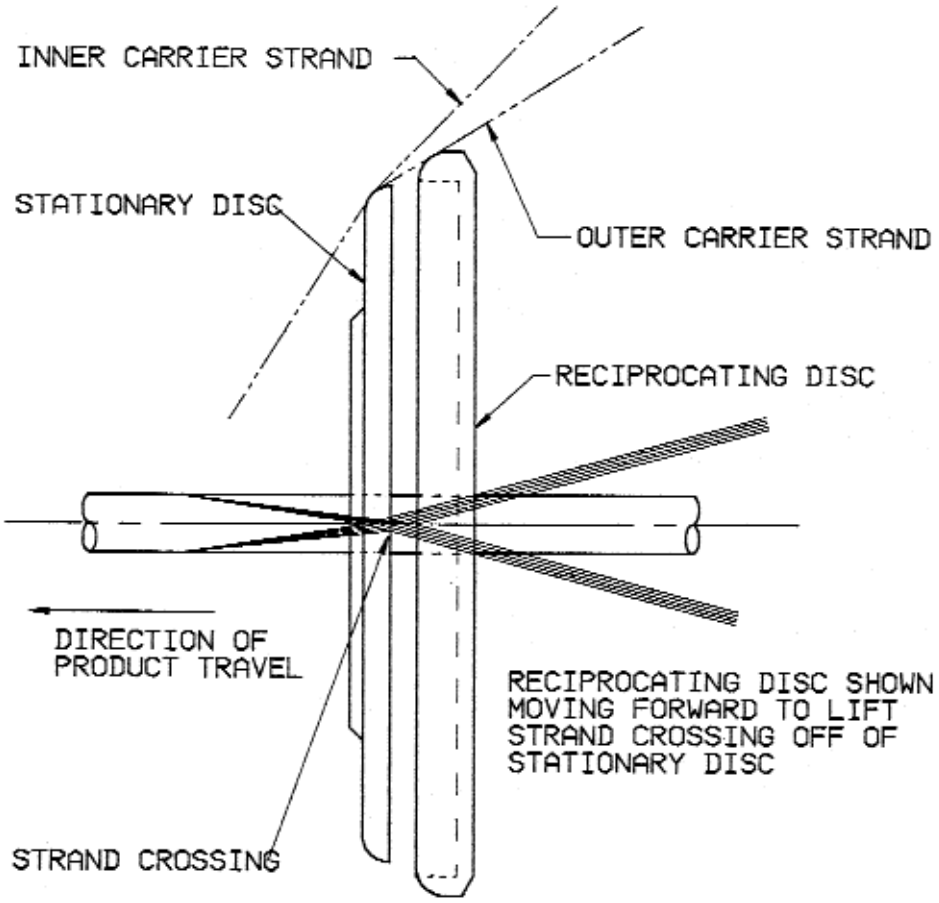

POWER FORMER DISCS

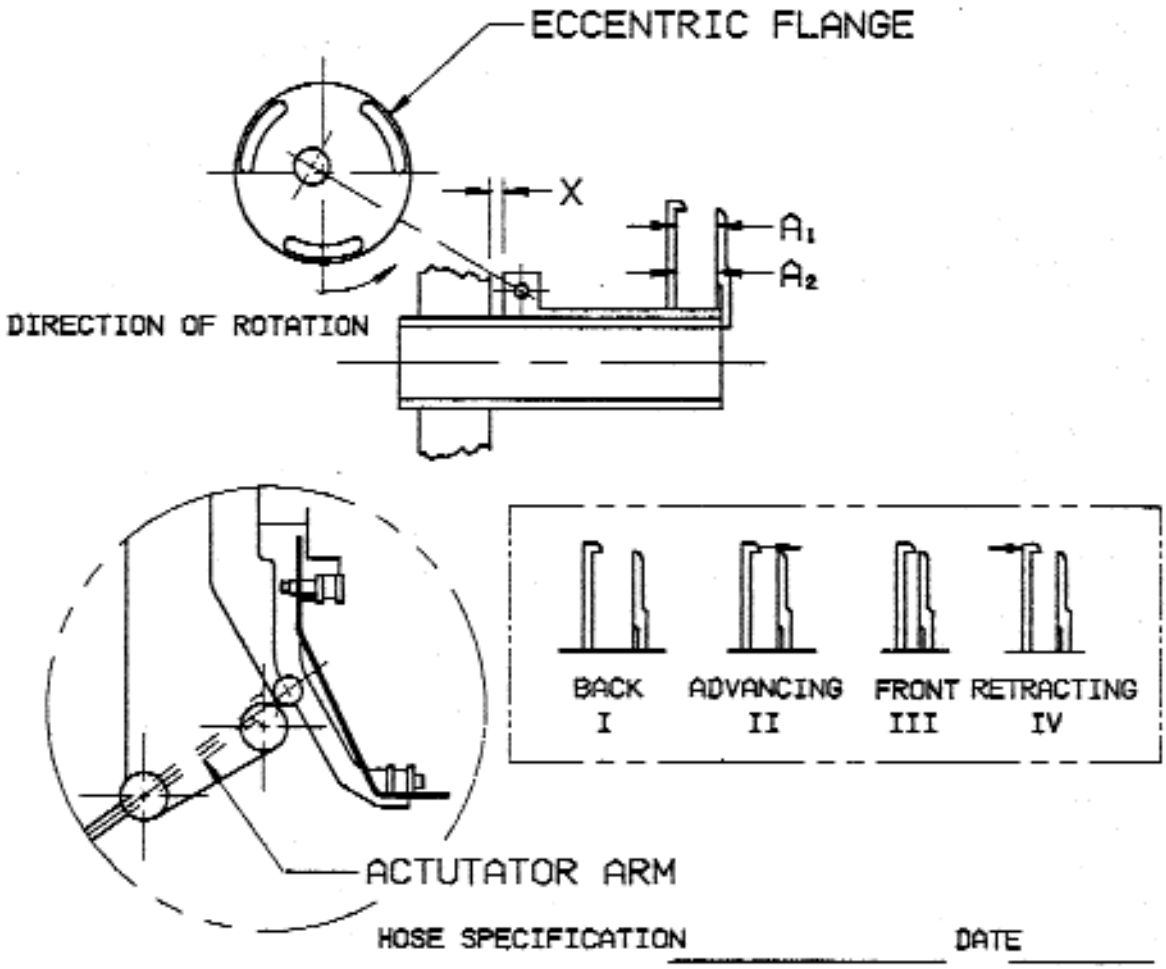

	PLY 1	PLY 2	PLY 3
A_1			
A_2			
POSITION			

POWER FORMER SETTING SPECIFICATION

4. Inch the machine to the position with the reciprocating disc fully retracted then loosen the 3/8-16 inch socket head cap screw which clamps the mounting tube and its attached stationary disc in position. Note that a flat is provided on the mounting tube for the screw to tighten against.

5. Set the axial position of the stationary disc so that distance from the back of the stationary disc to the bottom of the large counterbore in the reciprocating disc (shown as dimension A1 on Sketch #5) is approximately 32 mm (1-1/4 inch). The settings employed above will permit one to braid product and obtain the required product lead and diameter specifications.

6. Braid sufficient product at "run" speed to establish a stable braid point location. This is usually stabilized after 2 m (6 feet) of production.

7. It is now necessary to make the final settings to optimize the Power Former function. Inch the machine until the reciprocating disc is in its fully extended position and measure the distance the strands are being lifted off the stationary disc. If necessary, move the stationary disc until this distance is 1.5 mm (1/16 inch) for wire, and 6.5 mm (1/4 inch) for yarn.

8. Again, braid sufficiently at full speed to stabilize the braid point location.

9. Inch the machine and examine the transfer of strand crossings over the Power Former discs. If necessary, advance or retard the timing of the reciprocating disc motion, so that the reciprocating disc lifts or gently nudges the "stuck" crossings over the stationary disc immediately after these crossings reach the stationary disc.

   When viewing strand crossings formed by the counter-rotating carriers, note that the time at which the crossings reach the discs will be slightly different depending upon whether the strand from the outer carrier comes from an actuator arm, or passing under an inner carrier. A Power Former setting acceptable to both conditions must be used.

C. General guidelines for setting Power Former

1. Always evaluate Power Former settings with a stable braid point location. This condition is achieved when the lead, diameter over braid, and strand tension have been established by at least 2 m (6 feet) of full speed run. At full speed, the machine will perform somewhat differently than during inching.

2. For Wire - the reciprocating disc should lift the wire as little as possible, while still providing sufficiently strong lift or nudge to push the crossings over the stationary disc. Our experience is that 1.5 - 3 mm (1/16 - 1/8 inch) lift off the stationary disc is sufficient.

3. For Yarn - Normally the same setting is used as for wire; but for yarn with surface treatments which inhibit sliding of the strands around the discs, or for low or zero twist yarns which splay or flatten a great deal at their contact point with the discs, it is often desirable to lift these strands off the stationary disc as much as 6.5 mm (1/4 inch) so that strands contact each disc approximately half the time, thereby minimizing the sliding action around the discs.